PART DASH NO.	NEXT ASSY	USED ON

REVISIONS			
LTR	DESCRIPTION	DATE	APPROVAL
A	ECO 210352. 8-19-21 REC	8-19-21	EJZ
B	ECO 260520. 11-10-26 REC		

APPROVED
By Jason Skouson at 1:10 pm, Nov 10, 2026

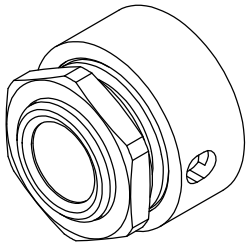

SCALE 1 : 1.5

NOTES UNLESS OTHERWISE SPECIFIED:

1. NOMENCLATURE:
HUMIDITY INDICATING DEVICE, ELECTRONIC, GEN 1.1

2. MATERIALS:

2.1 HOUSING AND MOUNTING NUT: ALUMINUM ALLOYS

2.2 EXTERNAL GASKET: ELASTOMER IAW MIL-R-6855

2.3 INTERNAL GASKET AND WINDOW O-RING (NOT SHOWN): SILICONE.

2.4 PUSHBUTTON WINDOW: BOROSILICATE GLASS IAW MIL-DTL-7989

2.5 HUMIDITY INDICATOR CARD: CHEMICALLY IMPREGNATED BLOTTER PAPER IAW MIL-I-8835.

2.6 BATTERY (NOT SHOWN): LITHIUM-THIONYL CHLORIDE.

3. FINISHES: ALUMINUM ALLOYS ANODIZED IAW MIL-A-8625, TYPE II, CLASS 1.

4. INSTALLATION:

4.1 MOUNTING NUT TORQUE: 30-40 IN-LBS.

4.2 LUBRICATE GASKET UNDER MOUNTING NUT PRIOR TO INSTALLATION.

4.3 ACTIVATION: DEVICE SHIPS IN SLEEP MODE. ACTIVATE BY AIMING HANDHELD ACTIVATOR INTO DEVICE WINDOW UNTIL DEVICE DISPLAYS ACTIVATION SEQUENCE (FLASHING ALTERNATING RED AND GREEN)

INTERPRET DIMENSIONS AND TOLERANCES IAW ASME Y14.5M 1994
UNLESS OTHERWISE SPECIFIED DIMENSIONS ARE IN INCHES
TOLERANCES:
DECIMALS .XX ± .015 .XXX ± .010
ANGLES ± .5°
DO NOT SCALE DRAWING

FINISH

SIMILAR TO	ACT WT	CALC WT

CONTRACT NO.

DRAWN	J.SKOUSON	6-30-21
CHECK	E.ZUERCHER	7-8-21
APPROVED	E.ZUERCHER	7-8-21
MANUFACTURING		
CUSTOMER		

agm **CONTAINER CONTROLS, INC.**
P.O. BOX 40020 - TUCSON, ARIZONA 85717-0020

TITLE
ELECTRONIC HUMIDITY INDICATING DEVICE, GEN 1.1

SIZE	FSCM NO.	DWG. NO.	REV.
A	08992	357200	B

SCALE	RELEASE DATE	SHEET
NONE		1 OF 3

A SIZE SHT 1 7/02

FILE \SOLIDWORKS\357200 - Gen 1.1 Electronic Humidity Sensor\357200.SLDDRW

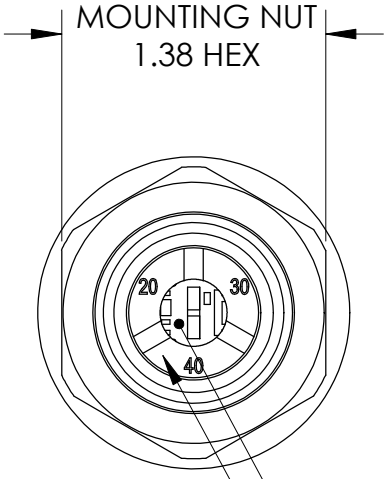

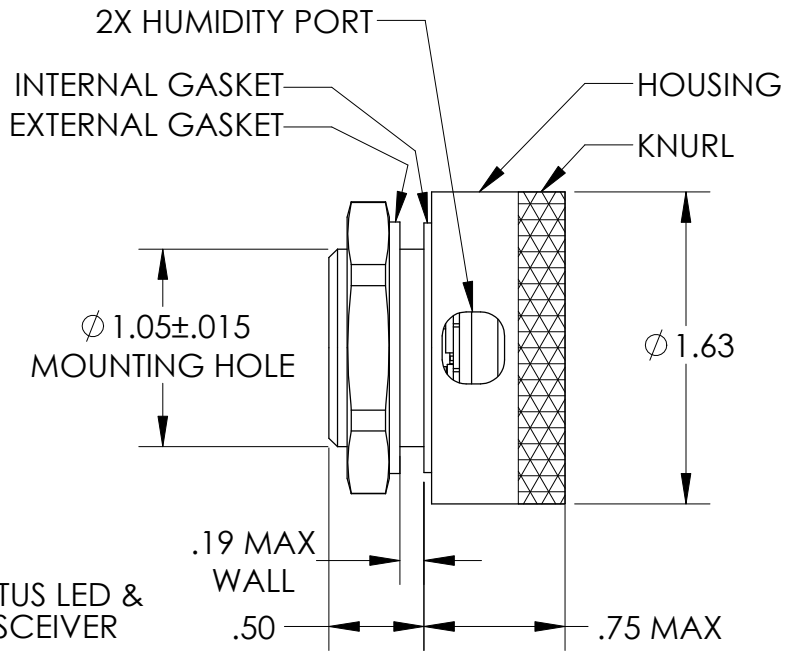

5. PERFORMANCE:

5.1 TEMPERATURE:

5.1.1 OPERATING RANGE: -25°C TO +60°C

5.1.2 ACCURACY: ±1°C WITHIN OPERATING RANGE.

5.2 HUMIDITY:

5.2.1 OPERATING RANGE: 0%RH TO 100%RH CONDENSING

5.2.2 ACCURACY: ±2%RH TYPICAL BETWEEN 20%RH AND 80%RH AT 25°C. TYPICAL LONG-TERM DRIFT <0.25%RH/YEAR.

5.2.3 HUMIDITY INDICATOR CARD: RELATIVE HUMIDITY (RH) OF AIR IS INDICATED BY 20, 30 AND 40 PERCENT SEGMENTS ON INDICATOR CARD (ALTERNATE CARDS AVAILABLE ON REQUEST). A BLUE COLOR IN SEGMENT INDICATES RH IS LESS THAN NUMBER IN SEGMENT. A LAVENDER OR PINK COLOR IN SEGMENT INDICATES RH IS EQUAL TO OR GREATHER THAN NUMBER IN SEGMENT. COLOR CHANGE IS REVERSIBLE UNDER NORMAL CONDITIONS.

5.3 BATTERY LIFE: 20 YEARS (BATTERY NOT REPLACEABLE)

5.4 DATA MEMORY: 20 YEARS OF TEMPERATURE/HUMIDITY READINGS TAKEN AT 1-HOUR INTERVALS

5.5 PRESSURE RATING:
-4 PSID TO +4 PSID.

SIZE	FSCM NO.	DWG. NO.	REV.
A	08992	357200	B
NONE		SHEET 2	

FILE \SOLIDWORKS\357200 - Gen 1.1 Electronic Humidity Sensor\357200.SLDDRW

6. DESCRIPTION OF OPERATION:

6.1 DEVICE LOGS TEMPERATURE AND RELATIVE HUMIDITY ONCE PER HOUR. DATA RECORD IS DOWNLOADABLE IN CSV FORMAT VIA INTERROGATOR TOOL WITHOUT REMOVAL OF THE DEVICE FROM CONTAINER

6.2 STATUS LED ACTIVATED BY PUSHBUTTON WINDOW OR BY HANDHELD ACTIVATOR. LED FLASHES RED IF PRE-SET THRESHOLD HAS BEEN EXCEEDED AND ILLUMINATES SOLID GREEN IF THE THRESHOLD HAS NOT BEEN EXCEEDED. THRESHOLD IS A USER-SETTABLE NUMBER OF CONSECUTIVE READING ABOVE A USER-SETTABLE %RH. THRESHOLD IS PROGRAMMABLE VIA INTERROGATOR TOOL.

6.3 DEVICE IS RESETTABLE VIA INTERROGATOR TOOL.

6.3.1 SOFT RESET: RESETS THE LED FROM RED TO GREEN. DOES NOT DELETE DATA RECORD.

6.3.2 HARD RESET: RESETS THE LED FROM RED TO GREEN, DELETES THE DATA RECORD, AND PUTS THE DEVICE TO SLEEP UNTIL REACTIVATION BY HANDHELD ACTIVATOR.

6.4 HUMIDITY ENTERS DEVICE THROUGH HUMIDITY PORTS. PORTS MUST REMAIN OPEN TO ENVIRONMENT BEING MONITORED.

6.5 HUMIDITY INDICATOR CARD PROVIDES A PASSIVE BACKUP TO ELECTRONIC MONITORING.

7. ACCESSORIES:

7.1 HANDHELD ACTIVATOR: USB-RECHARGEABLE INFRARED ACTIVATOR IN A TACTICAL FLASHLIGHT HOUSING. STRAIGHT ON ACTIVATION RANGE IS AT LEAST 10 FT (3 METERS) IN DIRECT SUNLIGHT

HANDHELD ACTIVATOR PART NUMBER: 357228

7.2 INTERROGATOR TOOL: COMMUNICATES WITH THE DEVICE USING SERIAL INFRARED COMMUNICATION OVER A RANGE OF SEVERAL INCHES AND TRANSMITS DATA TO COMPUTER USING MICRO USB AND RS-232 CONNECTORS.

INTERROGATOR TOOL PART NUMBER: 357229