REVISIONS				
ZONE	LTR.	DESCRIPTION	DATE	APPROVED

APPROVED
By Eric Zuercher at 10:02 am, Dec 15, 2025

NOTES:

1. NOMENCLATURE: SHOCK OVERLOAD INDICATOR.
2. OPERATION: A RED BAND IS EXPOSED ON THE ROD BENEATH THE PLASTIC DOME WHEN THE SHOCKMASTER IS SUBJECT TO A SHOCK IN EXCESS OF G RATING FOR A MINIMUM OF 20 MILLISECONDS.
3. RESETTING: REMOVE MS35265–12 SCREW, INSERT A PIN IN THE ACCESS HOLE IN THE SIDE OF THE DOME, AND USE PIN TO SLIDE THE BLACK SLEEVE OVER THE RED BAND. FOR SETTINGS 25G AND HIGHER, DEPRESS RESET BUTTON WHILE SLIDING BLACK SLEEVE. ACCESS TO RESET CAN BE PROTECTED BY INSTALLING SAFETY WIRE THROUGH MS35265–12 SCREW AND RESET BUTTON, IF PRESENT.
4. MATERIALS:

4.1 HOUSING: ALUMINUM ALLOY.

4.2 DOME: CLEAR POLYCARBONATE (LEXAN).

5. FINISH: HOUSING AND (IF APPLICABLE) MOUNTING PLATE: CLEAR ANODIZED IAW MIL–A–8625, TYPE II, CLASS 1.

6. SEE FOLLOWING SHEETS FOR TYPICAL CONFIGURATION DRAWINGS.

PART NUMBER TABLE

TA280-**XXX** - **XXX** (-C5)

DASH NO.	CONFIGURATION
-016	EQUAL-G, REAR MOUNTING
-017	EQUAL-G, REAR MOUNTING, ELECTRICAL (NORMALLY OPEN)
-018	EQUAL-G, FRONT MOUNTING
-019	EQUAL-G, FRONT MOUNTING, ELECTRICAL (NORMALLY OPEN)
-020	LONG AXIS, REAR MOUNTING
-021	LONG AXIS, REAR MOUNTING, ELECTRICAL (NORMALLY OPEN)
-022	LONG AXIS, FRONT MOUNTING
-023	LONG AXIS, FRONT MOUNTING, ELECTRICAL (NORMALLY OPEN)

DASH NO.	NOMINAL G-RATING
-005	5 G
-010	10 G
-015	15 G
-020	20 G
-025	25 G
-030	30 G
-035	35 G
-040	40 G
-050	50 G

CONTACT AGM FOR ADDITIONAL SETTINGS AND CONFIGURATIONS

DASH NO.	CERTIFICATION & TOLERANCE
NONE	±10 % TOLERANCE, CERTIFIED
-C5	± 5 %** TOLERANCE, CERTIFIED

** ± 5 % TOLERANCE ONLY AVAILABLE ON LONG AXIS SHOCKMASTERS WITH SETTINGS OF 10 G OR GREATER.

EXAMPLE: TA280-022-015-C5 LONG AXIS, FRONT MOUNTING SHOCKMASTER, SET FOR 15 G WITH ± 5 % TOLERANCE, CERTIFIED.

PART DASH NO.	NEXT	FINAL	NEXT ASSY.	USED ON
	QTY. REQ'D PER ASSY.		APPLICATION	

FINAL

INTERPRET DIMENSIONS AND TOLERANCES IAW ASME Y14.5M–1994

UNLESS OTHERWISE SPECIFIED DIMENSIONS ARE IN INCHES TOLERANCES:

DECIMALS .XX ±.015 .XXX ±.010 ANGLES ±.5°

DO NOT SCALE DRAWING

FINISH 5.

SIMILAR TO | ACT. WT. | CALC. WT.

CONTRACT

DRAWN	R.CASAD	1–26–22
CHECK	E.ZUERCHER	12–27–22
APPROVED	E.ZUERCHER	12–27–22
MANUFACTURING		
CUSTOMER		

agm CONTAINER CONTROLS, INC.
P.O. BOX 40020 – TUCSON, ARIZONA 85717–0020

TITLE SHOCKMASTER

SIZE C | FSCM NO. 08992 | DWG. NO. TA280 | REV A

SCALE 2/1 | RELEASE DATE | SHEET 1 OF 4

CMAT 1/01

FILE TA280

REVISIONS				
ZONE	LTR.	DESCRIPTION	DATE	APPROVED

FIGURE 1:

1. SHOCK OVERLOAD INDICATOR, EQUAL G, REAR MOUNTING MODEL.
2. SENSITIVITY: SENSITIVE TO BOTH TRANSVERSAL AND LONGITUDINAL (UP) SHOCK WHEN MOUNTED AS SHOWN.

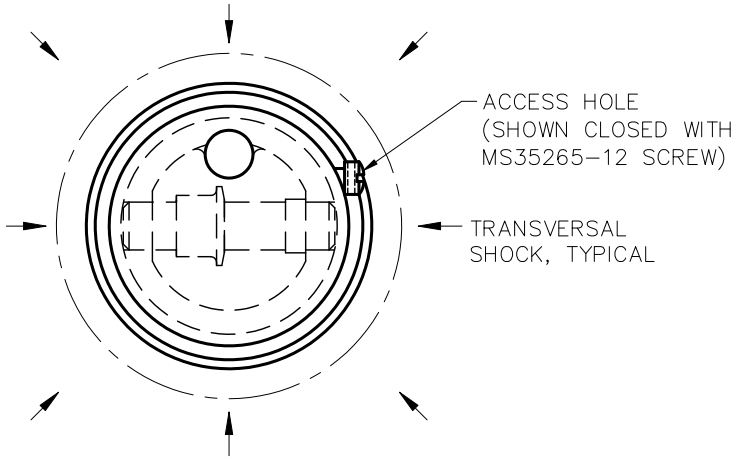

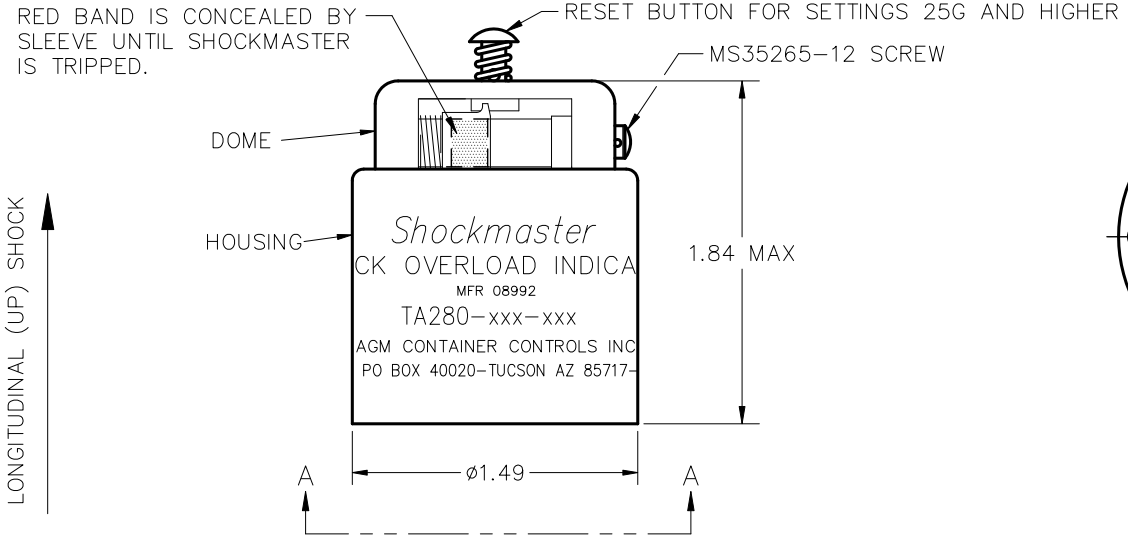

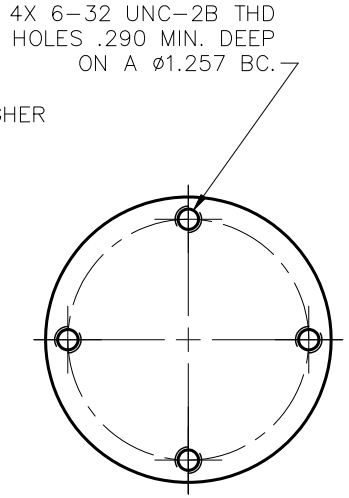

VIEW A-A

SIZE	FSCM NO.	DWG. NO.	REV
C	08992	TA280	A
SCALE NONE		SHEET 2	

CCONT 4/91

FILE TA280

REVISIONS				
ZONE	LTR.	DESCRIPTION	DATE	APPROVED

FIGURE 2:

1. SHOCK OVERLOAD INDICATOR, EQUAL G, FRONT MOUNTING MODEL.
2. SENSITIVITY: SENSITIVE TO BOTH TRANSVERSAL AND LONGITUDINAL (UP) SHOCK WHEN MOUNTED AS SHOWN.

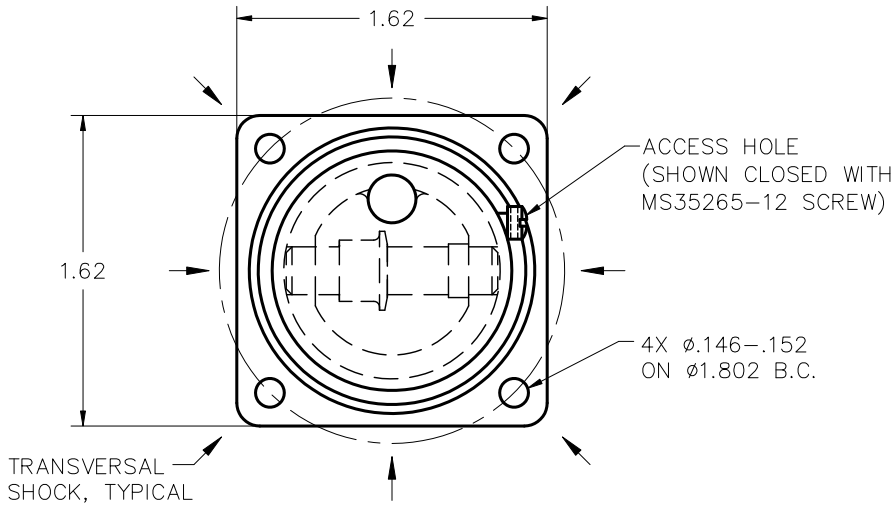

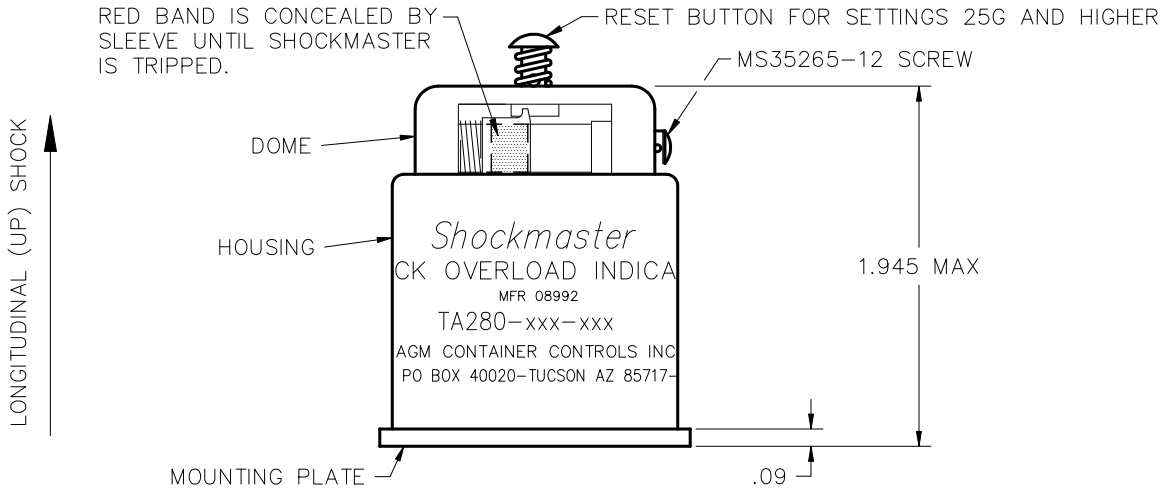

SIZE	FSCM NO.	DWG. NO.	REV
C	08992	TA280	A
SCALE NONE		SHEET 3	

CCONT 4/91

FILE TA280

REVISIONS				
ZONE	LTR.	DESCRIPTION	DATE	APPROVED

FIGURE 3:

1. SHOCK OVERLOAD INDICATOR, LONG AXIS, FRONT MOUNTING MODEL WITH ELECTRICAL CONTACTS.

2. SENSITIVITY: SENSITIVE ONLY TO LONGITUDINAL (UP) SHOCK WHEN MOUNTED AS SHOWN.

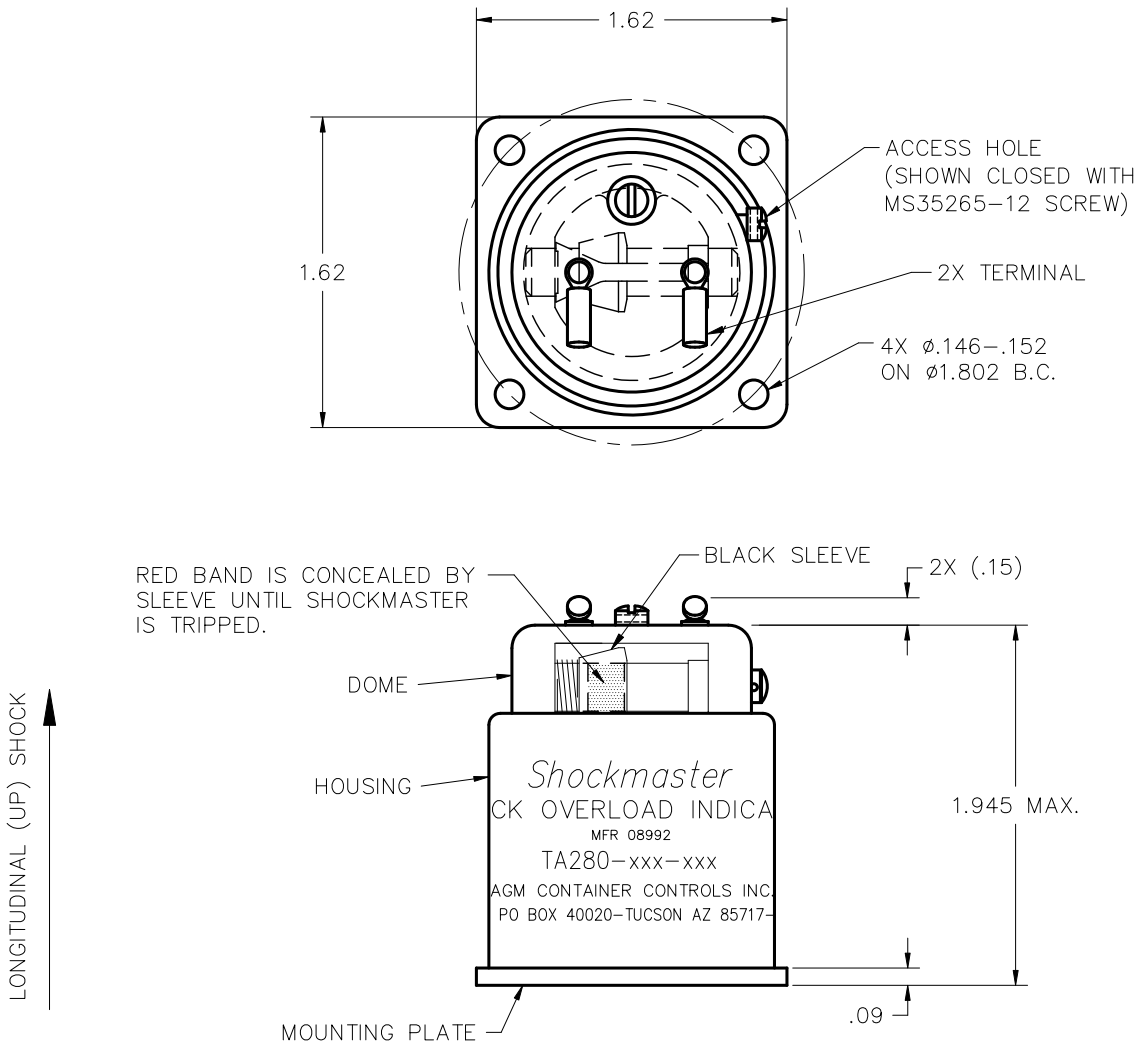

SIZE	FSCM NO.	DWG. NO.	REV
C	08992	TA280	A
SCALE NONE		SHEET 4	

CCONT 4/91

FILE TA280