REVISIONS				
ZONE	LTR.	DESCRIPTION	DATE	APPROVED

APPROVED
By Eric Zuercher at 8:07 am, Sep 10, 2025

NOTES UNLESS OTHERWISE SPECIFIED

1. SPECIFICATIONS:

1.1 DESICCATOR SHALL BE MANUFACTURED IAW THE REQUIREMENTS OF MIL-I-26860, TYPE II, AS APPLICABLE.

1.2 RELATIVE HUMIDITY (RH) OF AIR INSIDE CONTAINER IS INDICATED BY ONE OR MORE SEGMENTS ON INDICATOR CARD. BLUE COLOR IN SEGMENT INDICATES RH IS LESS THAN NUMBER IN THAT SEGMENT. LAVENDER OR PINK COLOR IN SEGMENT INDICATES RH IS EQUAL TO OR GREATER THAN NUMBER IN THAT SEGMENT. COLOR CHANGE IN CARD IS REVERSIBLE UNDER NORMAL CONDITIONS.

1.3 INDICATOR CARD IN CENTER OF WINDOW INDICATES CONDITION OF DESICCANT. REPLACE DESICCATOR OR REFILL WITH ACTIVE DESICCANT WHEN CARD IS LAVENDER OR PINK.

2. MATERIALS AND FINISH:

2.1 HOUSING, TUBE AND END CAP: ALUMINUM ALLOYS.

2.2 FINISH: ALUMINUM ALLOYS ANODIZED IAW MIL-A-8625, TYPE II, CLASS 1.

2.3 WINDOW: PLEXIGLAS.

2.4 SCREEN: 80 MESH MONEL.

2.5 INDICATOR CARDS: CHEMICALLY IMPREGNATED BLOTTER PAPER IAW MIL-I-8835.

2.6 FILTER: FILTER PAPER, COMMERCIAL.

2.7 O-RING: NEOPRENE OR NITRILE.

2.8 DESICCANT: MOLECULAR SIEVE TYPE 4A OR WHITE SILICA GEL AS INDICATED BY PART NUMBER.

3. FOR ACCESS TO DESICCANT CHAMBER REMOVE END CAP, SCREEN AND FILTER.

4. RECOMMENDED INSTALLATION TORQUE: 20-30 IN-LBS.

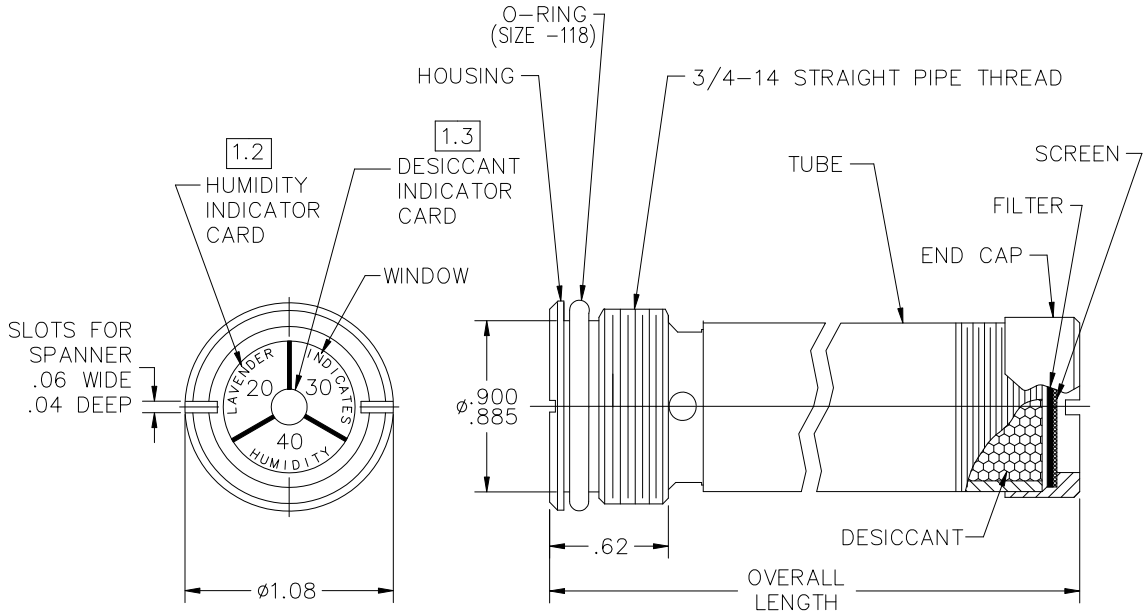

EXAMPLE PART NUMBERS:
TA364-SG-40 (2.2" LONG, SILICA GEL, 40%RH INDICATOR CARD)
TA365-01-246P (4.0" LONG, MOLECULAR SIEVE, 20-40-60%RH INDICATOR CARD)

PART NUMBER GUIDE

BASE NUMBER	OVERALL LENGTH	DESICCANT CAPACITY
TA364	2.20 ±.10	6 GRAMS
TA365	4.00 ±.10	14 GRAMS

DESICCANT NUMBER
-01- (MOLECULAR SIEVE) 2.8
-SG- (SILICA GEL) 2.8
-0- (EMPTY)

INDICATOR CARD NUMBER	INDICATED RELATIVE HUMIDITY
123P	10%, 20%, 30%
234P**	20%, 30%, 40%
246P**	20%, 40%, 60%
40	40%

**STANDARD CARD. ALL OTHER CARDS ARE SPECIAL ORDER. ADDITIONAL OPTIONS MAY BE AVAILABLE UPON REQUEST.

PART DASH NO.	NEXT	FINAL	NEXT ASSY.	USED ON
	QTY. REQ'D PER ASSY.		APPLICATION	

FINAL

INTERPRET DIMENSIONS AND TOLERANCES IAW ASME Y14.5M-1994

UNLESS OTHERWISE SPECIFIED DIMENSIONS ARE IN INCHES
TOLERANCES:
DECIMALS .XX ±.015 .XXX ±.010
ANGLES ±.5°

DO NOT SCALE DRAWING

FINISH 2.2

SIMILAR TO | ACT. WT. | CALC. WT.

CONTRACT		
DRAWN	R.CASAD	1-24-25
CHECK	E.ZUERCHER	1-27-25
APPROVED	E.ZUERCHER	1-27-25
MANUFACTURING		
CUSTOMER		

agm CONTAINER CONTROLS, INC.
P.O. BOX 40020 - TUCSON, ARIZONA 85717-0020

TITLE
DESICCATOR WITH HUMIDITY INDICATOR

SIZE	FSCM NO.	DWG. NO.	REV
C	08992	TA364-TA365	A

SCALE 1/1 | RELEASE DATE | SHEET 1 OF 1

CMAT 1/01

FILE
TA364-TA365