DRG No
BL/D7548/01-02 INST
USED ON ———

REMOVE ALL SHARP EDGES UNLESS SPECIFIED

THIRD ANGLE PROJECTION

DO NOT SCALE – ASK

THIS DRAWING IS THE PROPERTY OF BROWNELL LTD,AND MAY NOT BE COPIED OR REPRODUCED WITHOUT THEIR PRIOR WRITTEN PERMISSION

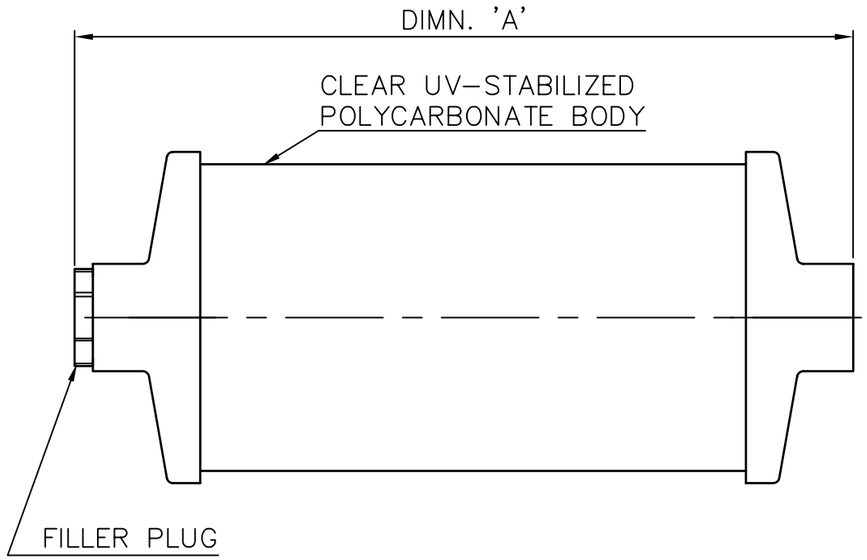

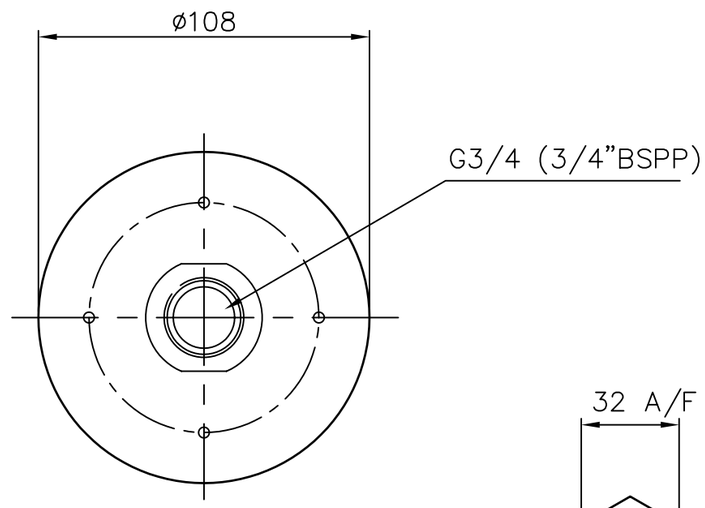

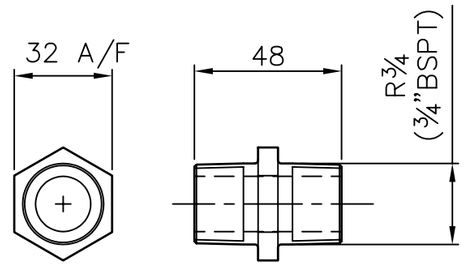

3/4" BSPT ADAPTOR PLUG

DRG. No.	DIMN. 'A'
BL/D7548/01	162
BL/D7548/02	254

NOTES :–

1) FILLED WITH INDICATING BEADED SILICA GEL DESICCANT.

2) DRY AIR OUTLET CLEANLINESS LEVEL : 0.5 MICRONS.

3) DRYER IS SUPPLIED WITH A 3/4" BSPP ADAPTOR PLUG.

4) 2" BSPP ADAPTOR PLUG IS AVAILABLE – PART No. BL/D7696

CHANGE	MOD No	ISSUE	DATE
REDRAWN	6279	5	08-09-08

MATERIAL	PROTECTIVE FINISH	TOLERANCES ±2	BROWNELL Ltd. LONDON NW10 7XF	RED DOT=ORIGINAL BLACK DOT=COPY	DRAWN PK	CHECKED
POLYCARBONATE (UNLESS OTHERWISE STATED)	———	SURFACE TEXTURE ———	TITLE RESERVOIR VENT DRYER (ULTRA CLEAN RANGE)	DRAWING NUMBER BL/D7548/01-02 INST		
EST. WT. ———		DIMENSIONS IN in/mm mm				
		SCALE (ORIGINAL) 1:2				