REVISIONS				
ZONE	LTR.	DESCRIPTION	DATE	APPROVED

THIS DOCUMENT CONTAINS PROPRIETARY INFORMATION AND EXCEPT WITH WRITTEN PERMISSION BY AGM CONTAINER CONTROLS, INC. SUCH INFORMATION SHALL NOT BE PUBLISHED, DISCLOSED TO OTHERS OR USED FOR ANY PURPOSE AND THE DOCUMENT SHALL NOT BE DUPLICATED IN WHOLE OR IN PART.

NOTES UNLESS OTHERWISE SPECIFIED:

1. SPECIFICATIONS:

1.1 FOR ACCESS: ROTATE COVER COUNTER CLOCKWISE APPROXIMATELY 30° AND REMOVE. TO INSTALL COVER: ALIGN TANGS ON COVER WITH NOTCHES IN FLANGE. PRESS COVER ONTO FLANGE AND ROTATE CLOCKWISE TO STOP.

2. MATERIAL:

2.1 MOUNTING FLANGE, NUT AND WASHER: ALUMINUM ALLOYS

2.2 COVER: STAINLESS STEEL

2.3 CABLE: STAINLESS STEEL

2.4 GASKET: SILICONE RUBBER IAW A-A-59588, CLASS 2A OR 2B, GRADE 60.

3. FINISH:

3.1 ALUMINUM ALLOYS: CONVERSION COATED IAW MIL-DTL-5541, CLASS 1A.

3.2 NUT ADDITIONALLY COATED WITH DRY FILM LUBRICANT.

3.3 COVER: PASSIVATED IAW ASTM A967.

4. THIS ITEM IS NOT REPAIRABLE EXCEPT BY AGM CONTAINER CONTROLS, INC.

5. THE FOLLOWING ITEMS, WHICH ARE FURNISHED AS PART OF THIS ASSEMBLY, MAY BE PURCHASED SEPARATELY AS SPARES:

TA475-RC-PORT	REPLACEMENT COVER
770014-44	NUT
500016-6	WASHER
500080	GASKET

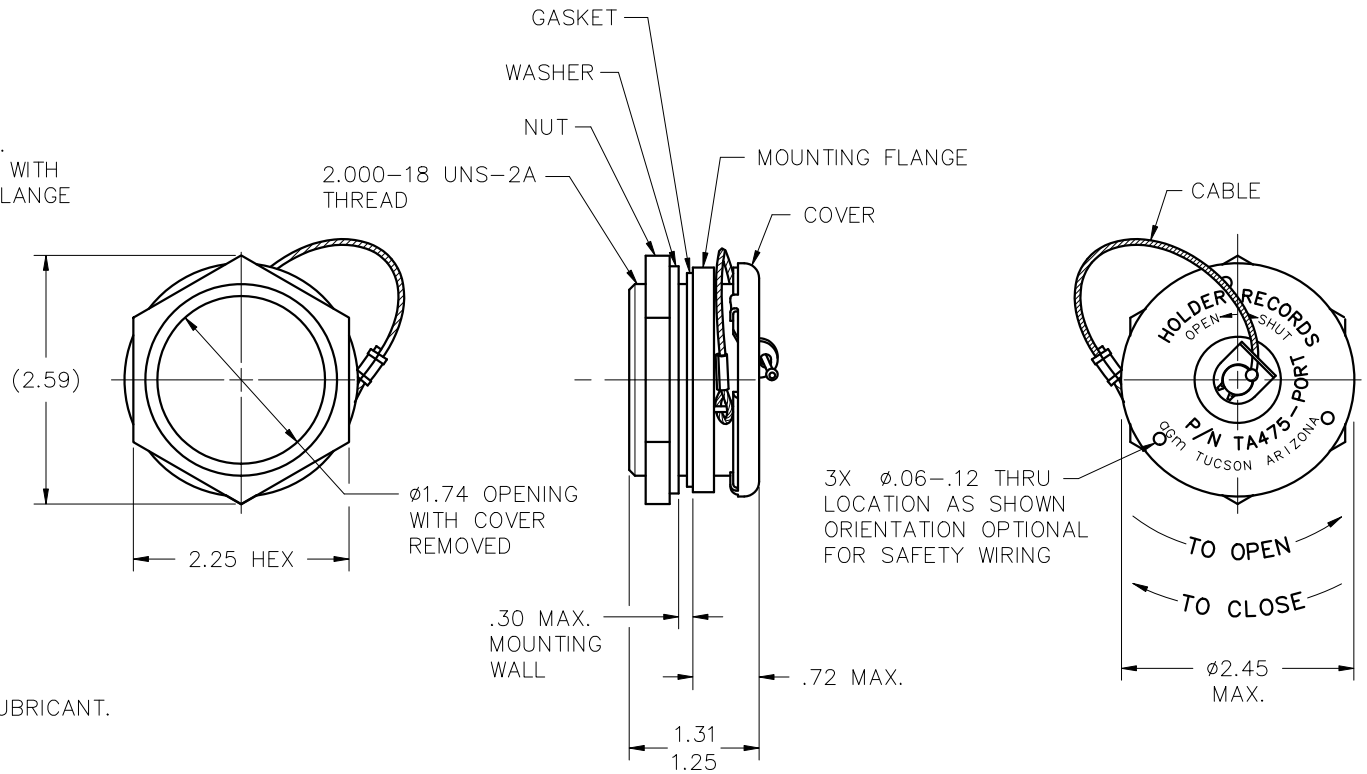

SPECIFICATION CONTROL DRAWING

PART DASH NO.	NEXT	FINAL	NEXT ASSY.	USED ON
	QTY. REQ'D PER ASSY.		APPLICATION	
			FINAL	

INTERPRET DIMENSIONS AND TOLERANCES IAW ASME Y14.5M-1982

UNLESS OTHERWISE SPECIFIED DIMENSIONS ARE IN INCHES TOLERANCES:

DECIMALS .XX ±.015 .XXX ±.010 — ANGLES ±.5°

DO NOT SCALE DRAWING

FINISH 3.

SIMILAR TO | ACT. WT. | CALC. WT.

CONTRACT		
DRAWN	M.ONTIVEROS	3-6-08
CHECK	P. LANE	3-19-08
APPROVED	P. LANE	3-19-08
MANUFACTURING		
CUSTOMER		

agm CONTAINER CONTROLS, INC.
P.O. BOX 40020 - TUCSON, ARIZONA 85717-0020

TITLE: RECORDS HOLDER, ACCESS PORT

SIZE	FSCM NO.	DWG. NO.	REV
C	08992	TA475-PORT	—

SCALE 1/1 | RELEASE DATE | SHEET 1 OF 1

CMAT 1/01

FILE TA475-PORT